Product series

Series name	Mounting type: Basic	LB	FA	FB	CA	CB	TC	Acting type	Bore size	CS1-A	DS1-A	CS1-F	DS1-F	CS1-U	DS1-U	CS1-B	DS1-B
Double acting type:SC	●	●	●	●	●	●	●	Double acting	32	●	●	●	●	●	●		
Double rod type: SCD	●	●	●				●		40	●	●	●	●	●	●		
Adjustable stroke type: SCJ	●	●	●				●		50	●	●	●	●	●	●		
Multi-position type: SCT 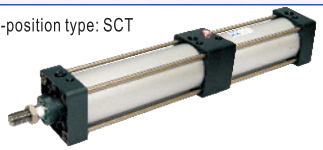	●	●							63	●	●	●	●	●	●		
									80	●	●	●	●	●	●		
									100	●	●	●	●	●	●		
									125							●	●
									160							●	●
									200							●	●
									250							●	●
Page	192		197							397							

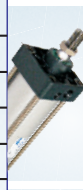

SC

Installation and application

1. When load changes in the work, the cylinder with abundant output capacity shall be selected.
2. Relative cylinder with high temperature resistance or corrosion resistance shall be chosen under the condition of high temperature or corrosion.
3. Necessary protection measure shall be taken in the environment with higher humidity, much dust or water drops, oil dust and welding dregs.
4. Dirty substances in the pipe must be eliminated before cylinder is connected with pipeline to prevent the entrance of particles into the cylinder.
5. The medium used by cylinder shall be filtered to 40 μ m or below.
6. Anti-freezing measure shall be adopted under low temperature environment to prevent moisture freezing.
7. The cylinder shall be carried out test run without load before application. Prior to run, buffer shall be turned to the minimum and gradually released to avoid the damage on cylinder caused by excessive impact.
8. The cylinder shall avoid the influence of side load in operation to maintain the normal work of cylinder and extend the service life.
9. If the cylinder is dismantled and stored for a long time, please conduct anti-rust treatment to the surface. Anti-dust caps shall be added in air inlet and outlet ports.

Criteria for selection: Cylinder thrust

Unit：Newton(N)

Bore size (mm)		32		40		50		63		80		100		125		160		200		250	
Rod size (mm)		12		16		20		20		25		25		32		40		40		50	
Acting type		Double acting																			
		Push	Pull	Push	Pull	Push	Pull	Push	Pull	Push	Pull	Push	Pull	Push	Pull	Push	Pull	Push	Pull	Push	Pull
Pressure area(mm^2)		804	690	1256	1055	1963	1649	3117	2803	5026	4536	7853	7362	12272	11468	20106	18849	31416	30159	49087	47124
Operating pressure(MPa)	0.1	80.4	69	125.6	105.5	196.3	164.9	311.7	280.3	502.6	453.6	785.3	736.2	1227.2	1146.8	2010.6	1884.9	3141.6	3015.9	4908.7	4712.4
	0.2	160.8	138	251.2	211.0	392.6	329.8	623.4	560.6	1005.2	907.2	1570.6	1472.4	2454.4	2293.6	4021.2	3769.8	6283.2	6031.8	9817.4	9424.8
	0.3	241.2	207	376.8	316.5	588.9	494.7	935.1	840.9	1507.8	1360.8	2355.9	2208.6	3681.6	3440.4	6031.8	5654.7	9424.8	9047.7	14726.1	14137.2
	0.4	321.6	276	502.4	422.0	785.2	659.6	1246.8	1121.2	2010.4	1814.4	3141.2	2944.8	4908.8	4587.2	8042.4	7539.6	12566.4	12063.6	19634.8	18849.6
	0.5	402	345	628.0	527.5	981.5	824.5	1558.5	1401.5	2513.0	2268.0	3926.5	3681.0	6136.0	5734.0	10053.0	9424.5	15708.0	15079.5	24543.5	23562.0
	0.6	482.4	414	753.6	633.0	1177.8	989.4	1870.2	1681.8	3015.6	2721.6	4711.8	4417.2	7363.2	6880.8	12063.6	11309.4	18849.6	18095.4	29452.2	28274.4
	0.7	562.8	483	879.2	738.5	1374.1	1154.3	2181.9	1962.1	3518.2	3175.2	5497.1	5153.4	8590.4	8027.6	14074.2	13194.3	21991.2	21111.3	34360.9	32986.8
	0.8	643.2	552	1004.8	844.0	1570.4	1319.2	2493.6	2242.4	4020.8	3628.8	6282.4	5889.6	9817.6	9174.4	16084.8	15079.2	25132.8	24127.2	39269.6	37699.2
	0.9	723.6	621	1130.4	949.5	1766.7	1484.1	2805.3	2522.7	4523.4	4082.4	7067.7	6625.8	11044.8	10321.2	18095.4	16964.1	28274.4	27143.1	44178.3	42411.6

www.Laheghi.com

SC

Symbol

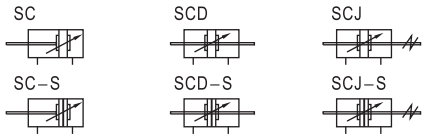

Product feature

1. Standard cylinder manufactured by our enterprise.
2. The seal of piston adopts heterogeneous two way seal structure. It's dimension is tight and it has the function of grease reservation.
3. It is tie rod cylinder. The cylinder barrel and front/rear cap is jointed by tie rods with high reliability.
4. Compared with ISO15552 standard cylinder, SC series cylinder with the same bore size is shorter.
5. The buffer adjustment of cylinder is smooth and steady.
6. Cylinders and mounting accessories with several specifications are optional.
7. The seal material with high temperature resistance is adopted to guarantee the normal operation of cylinder at 150℃.

Specification

Bore size(mm)		32	40	50	63	80	100
Acting type		Double acting					
Fluid		Air(to be filtered by 40 μ m filter element)					
Mounting type	SC	Basic FA FB CA CB LB TC TCM1					
	SCD, SCJ	Basic FA LB TC TCM1					
Operating pressure		0.1~1.0MPa(15~145psi)(1.0~10.0bar)					
Proof pressure		1.5MPa(215psi)(15bar)					
Temperature ℃		-20~80					
Speed range mm/s		30~800					
Stroke tolerance		$0\sim250^{+1.0}_{0}$ $251\sim1000^{+1.4}_{0}$ $1001\sim1500^{+1.8}_{0}$					
Cushion type		Variable cushion					
Adjustable cushion stroke mm		21				28	29
Port size ①		1/8"	1/4"		3/8"		1/2"

① PT thread, NPT thread and G thread are available.
Add) Refer to P397~420 for detail of sensor switch.

Stroke

Bore size (mm)	Standard stroke (mm)	Max. std stroke	Max. stroke
32	25 50 75 80 100 125 150 160 175 200 250 300 350 400 450 500	1000	2000
40	25 50 75 80 100 125 150 160 175 200 250 300 350 400 450 500 600 700 800	1200	2000
50	25 50 75 80 100 125 150 160 175 200 250 300 350 400 450 500 600 700 800 900 1000	1200	2000
63	25 50 75 80 100 125 150 160 175 200 250 300 350 400 450 500 600 700 800 900 1000	1500	2000
80	25 50 75 80 100 125 150 160 175 200 250 300 350 400 450 500 600 700 800 900 1000	1500	2000
100	25 50 75 80 100 125 150 160 175 200 250 300 350 400 450 500 600 700 800 900 1000	1500	2000

Note) If the stroke is ⩾1600mm within the maximum stroke scope, it is treated as non-standard one.
Please contact the company for other special strokes.

Ordering code

SC 50 × 50 S □ □ □

SCD50 × 50 S □ □ □

SCJ 50 × 50–20 S □ □ □

Model
- SC: Double acting type
- SCD: Double rod type
- SCJ: Adjustable stroke type

Bore size
- 32 40 50 63 80 100

Stroke
- Refer to stroke table for details

Adjustable stroke
- 10: 10mm
- 20: 20mm
- 30: 30mm
- 40: 40mm
- 50: 50mm
- 75: 75mm
- 100: 100mm

Magnet
- Blank: Without magnet
- S: With magnet

Thread type
- Blank: PT
- T: NPT
- G: G

Seals Material
- Blank: TPU
- H: Viton
- N: NBR

Mounting type ①

	Mounting type	Available series	Memo
Blank		SC SCD SCJ	
LB			
FA			
FB		SC	
CA	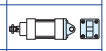		
CB			
TC		SC, SCD SCJ	Be used with TCM1

① Please refer to page 197~200 for accessory parts.

www.Lahegh.com

Inner structure and material of major parts

SC

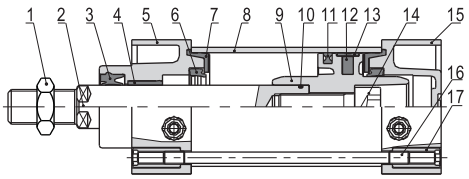

NO.	Item	Material
1	Rod nut	Carbon steel
2	Piston rod	Carbon steel with 20 μ m chrome plated
3	Front cover packing	TPU
4	Bushing	Wear resistant material
5	Front cover	Aluminum alloy
6	Cushing O-ring	NBR
7	Cushion gasket	TPU
8	Barrel	Aluminum alloy
9	Piston	Aluminum alloy
10	Piston rod O–ring	NBR
11	Piston seal	NBR
12	Magnet	Plastic
13	Wear ring	Wear resistant material
14	Bolt	Carbon steel
15	Back cover	Aluminum alloy
16	Tie-rod	Carbon steel
17	Tie-rod nut	Carbon steel

Dimensions

SC

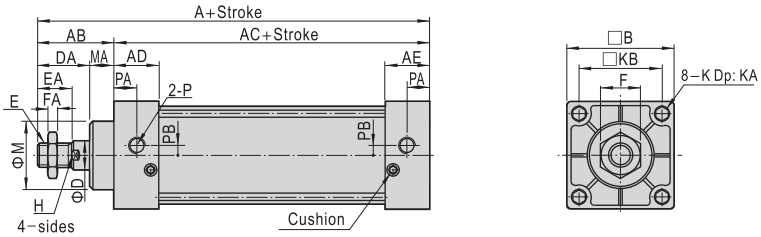

Bore size\Item	A	AB	AC	AD	AE	B	D	DA	E	EA	F	FA
32	140	47	93	27.5	27.5	45	12	32	M10×1.25	22	17	6
40	142	49	93	27.5	27.5	50	16	34	M12×1.25	24	17	7
50	150	57	93	27.5	27.5	62	20	42	M16×1.5	32	23	8
63	153	57	96	27.5	27.5	75	20	42	M16×1.5	32	23	8
80	182	75	107	33	33	94	25	54	M20×1.5	40	26	10
100	188	75	113	33	33	112	25	54	M20×1.5	40	26	10

Bore size\Item	H	K	KA	KB	M	MA	P	PA	PB
32	10	M6×1.0	9.5	33	28	15	1/8"	14	5.5
40	14	M6×1.0	9.5	37	32	15	1/4"	15	6
50	17	M6×1.0	9.5	47	38	15	1/4"	17	8.5
63	17	M8×1.25	9.5	56	38	15	3/8"	15	9.5
80	22	M10×1.5	11.5	70	47	21	3/8"	19.5	10
100	22	M10×1.5	11.5	84	47	21	1/2"	16.5	11

Remark: The dimensions of magnet type cylinder are the same as non-magnet type cylinder.

SCD

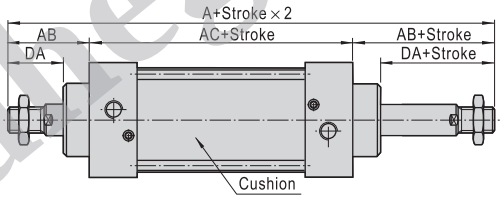

SCJ

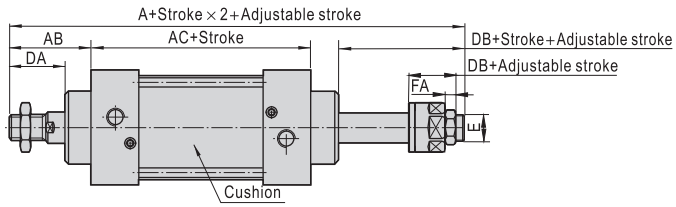

Bore size\Item	A		AB	AC	DA	DB	E	FA
Model	SCD	SCJ						
32	187	182	47	93	32	27	M10X1.25	6
40	191	185	49	93	34	28	M12X1.25	7
50	207	194	57	93	42	29	M16X1.5	8
63	210	197	57	96	42	29	M16X1.5	8
80	257	238.5	75	107	54	35.5	M20X1.5	10
100	263	244.5	75	113	54	35.5	M20X1.5	10

Remark:
1. The dimensions of magnet type cylinder are the same as non-magnet type cylinder.
2. The unmarked dimension is the same as SC standard type.

www.Labegitech.com

SC

Symbol

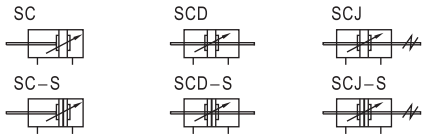

Product feature

1. ISO6430 standard cylinder.
2. The seal of piston adopts heterogeneous two way seal structure. It's dimension is tight and it has the function of grease reservation.
3. It is tie rod cylinder. The cylinder barrel and front/rear cap is jointed by tie rods with high reliability.
4. Compared with ISO15552 standard cylinder, SC series cylinder with the same bore size is shorter.
5. The buffer adjustment of cylinder is smooth and steady.
6. Cylinders and mounting accessories with several specifications are optional.
7. The seal material with high temperature resistance is adopted to guarantee the normal operation of cylinder at 150℃.

Specification

Bore size(mm)		125	160	200	250
Acting type		Double acting			
Fluid		Air(to be filtered by 40 μ m filter element)			
Mounting type	SC	Basic FA FB CA CB LB TC TCM1			
	SCD, SCJ	Basic FA LB TC TCM1			
Operating pressure		0.1~1.0MPa(15~145psi)(1.0~10.0bar)			
Proof pressure		1.5MPa(215psi)(15bar)			
Temperature ℃		-20~80			
Speed range mm/s		30~800			
Stroke tolerance		$0\sim250^{+1.0}_{0}$ $251\sim1000^{+1.4}_{0}$ $1001\sim1500^{+1.8}_{0}$			
Cushion type		Variable cushion			
Adjustable cushion stroke mm		28	29	33	40
Port size ①		1/2"	3/4"		1"

① PT thread, NPT thread and G thread are available.
Add) Refer to P397~420 for detail of sensor switch.

Stroke

Bore size (mm)	Standard stroke (mm)	Max. std stroke	Max. stroke
125	25 50 75 80 100 125 150 160 175 200 250 300 350 400 450 500 600 700 800 900 1000	1500	2000
160	25 50 75 80 100 125 150 160 175 200 250 300 350 400 450 500 600 700 800 900 1000	1500	2000
200	25 50 75 80 100 125 150 160 175 200 250 300 350 400 450 500 600 700 800 900 1000	1500	2000
250	25 50 75 80 100 125 150 160 175 200 250 300 350 400 450 500 600 700 800 900 1000	1500	2000

Note) Consult us for non-standard stroke.

Ordering code

SC 200 × 500 S □ □ □

SCD 200 × 500 S □ □ □

SCJ 200 × 500-50 S □ □ □

Model
- SC: Double acting type
- SCD: Double rod type
- SCJ: Adjustable stroke type

Bore size
- 125 160 200 250

Stroke
- Refer to stroke table for details

Adjustable stroke
- 10: 10mm
- 20: 20mm
- 30: 30mm
- 40: 40mm
- 50: 50mm
- 75: 75mm
- 100: 100mm

Magnet
- Blank: Without magnet
- S: With magnet

Thread type
- Blank: PT
- T: NPT
- G: G

Seals Material
- Blank: NBR
- H: Viton

Mounting type ①

	Mounting type	Available series	Memo
Blank		SC SCD SCJ	
LB			
FA			
FB		SC	
CA			
CB			
TC		SC, SCD SCJ	Be used with TCM1

① Please refer to page 197~200 for accessory parts.
Others: the TPU seal material is unavailable for big bore sized cylinder.

www.Laheghi.com

Inner structure and material of major parts

SC

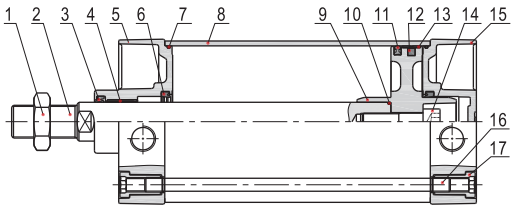

NO.	Item	Material
1	Rod nut	Carbon steel
2	Piston rod	Carbon steel with 20 μ m chrome plated
3	Front cover packing	TPU
4	Bushing	Wear resistant material
5	Front cover	Aluminum alloy
6	Cushing O-ring	TPU
7	O–ring	NBR
8	Barrel	Aluminum alloy
9	Piston	Aluminum alloy
10	Piston rod O–ring	NBR
11	Piston seal	NBR
12	Magnet	Plastic
13	Wear ring	Wear resistant material
14	Bolt	Carbon steel
15	Back cover	Aluminum alloy
16	Tie-rod	Carbon steel
17	Tie-rod nut	Carbon steel

Dimensions

SC

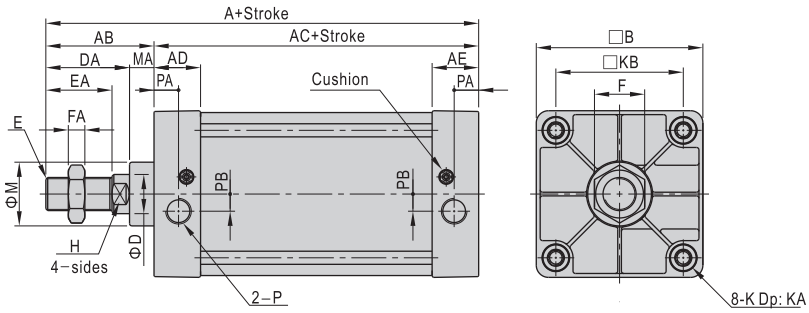

Bore size\Item	A	AB	AC	AD	AE	B	D	DA	E	EA	F	FA
125	203	88	115	38	38	136	32	68	M27×2.0	54	41	13.5
160	239	113	126	38	38	174	40	88	M36×2.0	72	55	18
200	244	118	126	38	38	214	40	88	M36×2.0	72	55	18
250	294	141	153	48	48	267	50	106	M42×2.0	84	65	21

Bore size\Item	H	K	KA	KB	M	MA	P	PA	PB
125	27	M12×1.75	16	104	52	20	1/2"	20	14
160	36	M16×2.0	15	134	62	25	3/4"	20	15
200	36	M16×2.0	15	163	62	30	3/4"	20	15
250	46	M20×2.5	19.5	202	86	35	1"	25.5	22

Remark: The dimensions of magnet type cylinder are the same as non-magnet type cylinder.

SCD

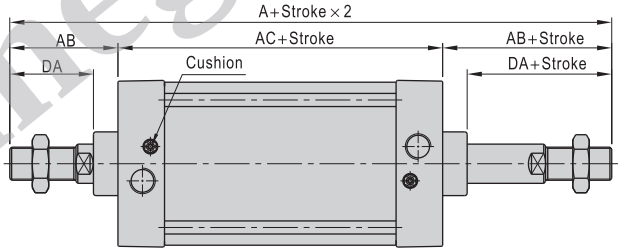

SCJ

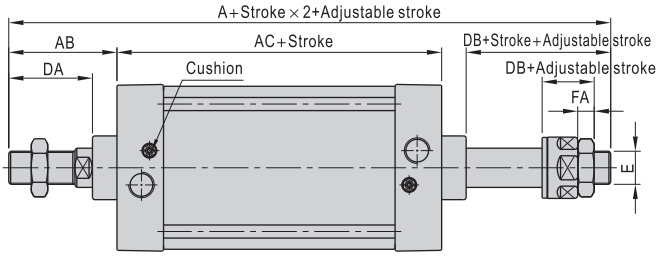

Bore size\Item	A		AB	AC	DA	DB	E	FA
Model	SCD	SCJ						
125	291	265.5	88	115	68	42.5	M27X2.0	13.5
160	352	332	113	126	88	68	M36X2.0	18
200	362	342	118	126	88	68	M36X2.0	18
250	435	409	141	153	106	80	M42X2.0	21

Remark:
1. The dimensions of magnet type cylinder are the same as non-magnet type cylinder.
2. The unmarked dimension is the same as SC standard type.

www.Lahegm.com

SCT Series(Multi-position type)

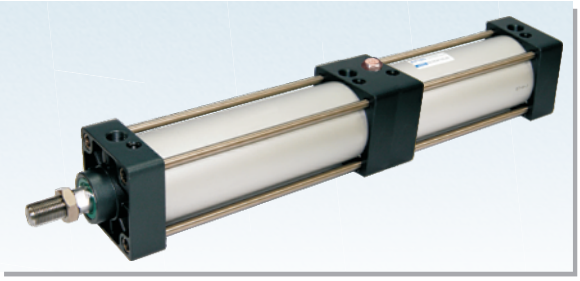

SC

Symbol

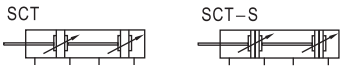

Product feature

1. Standard cylinder manufactured by our enterprise.
2. The seal of piston adopts heterogeneous two way seal structure. It's dimension is tight and it has the function of grease reservation.
3. It is tie rod cylinder. The cylinder barrel and front/rear cap is jointed by tie rods with high reliability.
4. Piston rod can be positioned in several positions in the whole action process.

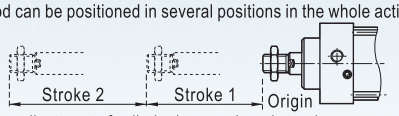

5. The buffer adjustment of cylinder is smooth and steady.
6. Cylinders and mounting accessories with several specifications are optional.
7. The seal material with high temperature resistance is adopted to guarantee the normal operation of cylinder at 150℃.

Inner structure and material of major parts

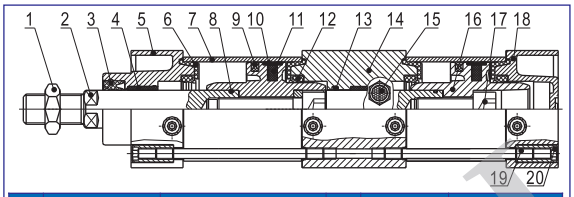

NO.	Item	Material	NO.	Item	Material
1	Rod nut	Carbon steel	11	Magnet	Plastic
2	Piston rod	Carbon steel with 20 μ m chrome plated	12	Gasket	NBR
			13	O－ring	NBR
3	Packing	TPU	14	Joint seat	Aluminum alloy
4	Bushing	Wear resistant material	15	Silencer	
5	Front cover	Aluminum alloy	16	Piston	Aluminum alloy
6	Cushing O-ring	TPU	17	Bolt	Carbon steel
7	Barrel	Aluminum alloy	18	Back cover	Aluminum alloy
8	Rod O－ring	NBR	19	Tie-rod	Carbon steel
9	Piston seal	NBR	20	Tie-rod nut	Carbon steel
10	Wear ring	Wear resistant material			

Specification

Bore size(mm)	32	40	50	63	80	100
Acting type	Double acting					
Fluid	Air(to be filtered by 40 μ m filter element)					
Mounting type	Basic FA FB CA CB LB TC TCM1					
Operating pressure	0.1~1.0MPa(15~145psi)(1.0~10.0bar)					
Proof pressure	1.5MPa(215psi)(15bar)					
Temperature ℃	-20~80					
Speed range mm/s	30~800					
Stroke tolerance	$0\sim250^{+1.0}_{0}$ $251\sim1000^{+1.4}_{0}$ $1001\sim1500^{+1.8}_{0}$					
Cushion type	Variable cushion					
Adjustable cushion stroke mm	21				28	29
Port size ①	1/8"	1/4"		3/8"		1/2"

① PT thread, NPT thread and G thread are available.
Add) Refer to P397~420 for detail of sensor switch.

Stroke

Bore size(mm)	Standard stroke (mm)	Max. std stroke	Max. stroke
32	25 50 75 80 100 125 150 160 175 200 250 300 350 400 450 500	500	800
40	25 50 75 80 100 125 150 160 175 200 250 300 350 400 450 500	500	800
50	25 50 75 80 100 125 150 160 175 200 250 300 350 400 450 500	500	800
63	25 50 75 80 100 125 150 160 175 200 250 300 350 400 450 500	500	800
80	25 50 75 80 100 125 150 160 175 200 250 300 350 400 450 500	500	800
100	25 50 75 80 100 125 150 160 175 200 250 300 350 400 450 500	500	800

Note) If the stroke is ≥800mm within the maximum stroke scope, it is treated as non-standard one.
Please contact the company for other special strokes.

Ordering code

SCT 50 × 50 × 50 S □ □ □

- **Model**: SCT: Double acting Multi-position type
- **Bore size**: 32 40 50 63 80 100
- **Stroke 1**: Refer to stroke table for details
- **Stroke 2**: Refer to stroke table for details
- **Magnet**: Blank: Without magnet; S: With magnet
- **Mounting type** ①: Mounting type is the same as SC, please refer to page 203 for details.
- **Seals Material**: Blank: TPU; H: Viton; N: NBR
- **Thread type**: Blank: PT; T: NPT; G: G

① Please refer to page 197~200 for accessory parts.

Dimensions

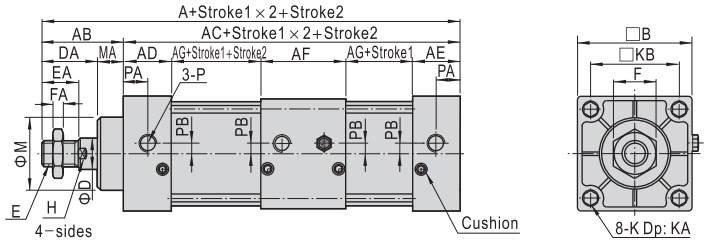

Bore size\Item	A	AB	AC	AD	AE	AF	AG	B	D	DA	E	EA
32	233	47	186	27.5	27.5	55	38	45	12	32	M10×1.25	22
40	235	49	186	27.5	27.5	55	38	50	16	34	M12×1.25	24
50	243	57	186	27.5	27.5	55	38	62	20	42	M16×1.5	32
63	249	57	192	27.5	27.5	55	41	75	20	42	M16×1.5	32
80	296	75	221	33	33	73	41	94	25	54	M20×1.5	40
100	308	75	233	33	33	73	47	112	25	54	M20×1.5	40

Bore size\Item	F	FA	H	K	KA	KB	M	MA	P	PA	PB
32	17	6	10	M6×1.0	9.5	33	28	15	1/8"	14	5.5
40	17	7	14	M6×1.0	9.5	37	32	15	1/4"	15	6
50	23	8	17	M6×1.0	9.5	47	38	15	1/4"	17	8.5
63	23	8	17	M8×1.25	9.5	56	38	15	3/8"	15	9.5
80	26	10	22	M10×1.5	11.5	70	47	21	3/8"	19.5	10
100	26	10	22	M10×1.5	11.5	84	47	21	1/2"	16.5	11

Remark: The dimensions of magnet type cylinder are the same as non-magnet type cylinder.

www.Lahegni.com

Accessories

Ordering code

F–SC 50 FA

- Accessory
- Model
- Bore size
- Accessory type ①

Mounting accessory	LB: LB type
	FA: FA type
	FB: FB type
	CA: CA type
	CB: CB type ②
	TC: TC type
	TCM1: TCM1 type

① Please refer to accessory list for selection and ordering information.
② CB is attached with relevant PIN.

Accessory selection

Accessories \ Cylinder model		SC		SCD, SCJ		SCT	
		Standard	With magnet	Standard	With magnet	Standard	With magnet
Mounting accessory	LB	●	●	●	●	●	●
	FA	●	●	●	●	●	●
	FB	●	●	×	×	●	●
	CA	●	●	×	×	●	●
	CB	●	●	×	×	●	●
	TC	●	●	●	●	●	●
	TCM1	●	●	●	●	●	●
Knuckle ①	I	●	●	●	●	●	●
	Y	●	●	●	●	●	●
	U	●	●	●	●	●	●
	F	●	●	●	●	●	●
Sensor switch ②	CS1–A	×	●	×	●	×	●
	DS1–A	×	●	×	●	×	●
	CS1–F	×	●	×	●	×	●
	DS1–F	×	●	×	●	×	●
	CS1–U	×	●	×	●	×	●
	DS1–U	×	●	×	●	×	●
	CS1–B	×	●	×	●	×	×
	DS1–B	×	●	×	●	×	×

① Please refer to P393~396 for knuckle detail. F knuckle unviable for 125 or above cylinder.
② Please refer to P397~420 for detail of sensor switch. CS1-B, DS1-B sensor switch only viable for 125 or above cylinder.

Material of accessories

Accessories / Bore size	Mounting accessories							Knuckle			
	LB	FA	FB	CA	CB	TC	TCM1	I	Y	F	U
32~100	□	●	●	◇	◇	◇	◇	□	□	□	□
125~200	◇	◇	◇	◇	◇	◇	◇	□	□	–	□
250	◇	■	■	◇	◇	◇	◇	■	■	–	–

●——Aluminum alloy, ■——Cast steel,
◇——Nodular cast iron, □——Carbon steel.

Dimensions

LB

Φ32~Φ100

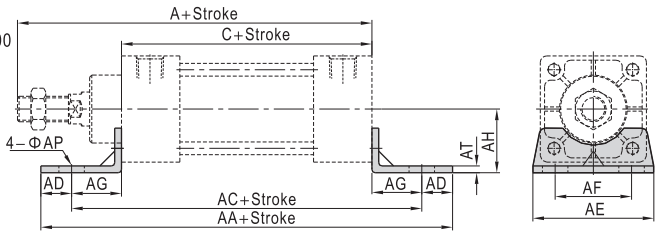

Φ125~Φ250

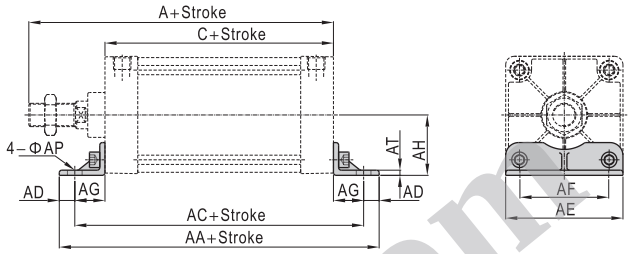

Bore size\Item	A	C	AA	AC	AD	AE	AF	AG	AH	AP	AT
32	140	93	153	134	9.5	50	33	20.5	28	9	3
40	142	93	169	140	14.5	57	36	23.5	30	12	3
50	150	93	173	149	12	68	47	28	36.5	12	3
63	153	96	184	158	13	80	56	31	41	12	3
80	182	107	199	167	16	97	70	30	49	14	4
100	188	113	209	173	18	112	84	30	57	14	4
125	203	115	221	185	18	136	104	35	70	17	6
160	239	126	246	206	20	174	134	40	91	17	8
200	244	126	276	226	25	214	163	50	113.5	22	9
250	294	153	323	273	25	267	201	60	141	26	15

CA

Φ32~Φ100

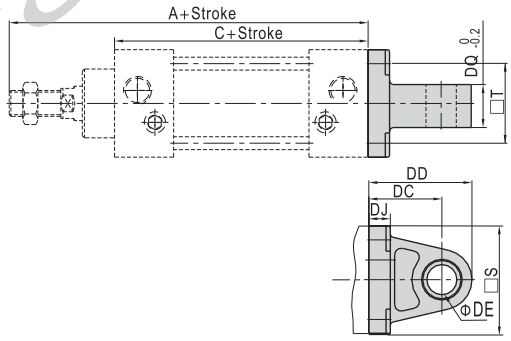

Φ125~Φ250

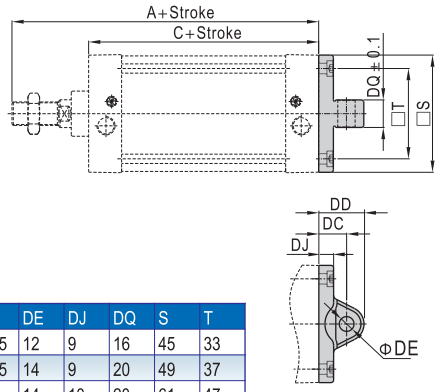

Bore size\Item	A	C	DC	DD	DE	DJ	DQ	S	T
32	140	93	34	44.5	12	9	16	45	33
40	142	93	34	45.5	14	9	20	49	37
50	150	93	34	46	14	10	20	61	47
63	153	96	34	46.5	14	10	20	74	56
80	182	107	48	64.5	20	14	32	93	70
100	188	113	48	65	20	14	32	111	84
125	203	115	32	52	20	17	31.7	135	104
160	239	126	40	68	28	19.5	39.7	173	134
200	244	126	60	90	28	23	39.7	213	163
250	294	153	70	106	36	24	49.7	255	202

www.Lahegan.com

Accessories

FA/FB

Φ32~Φ100

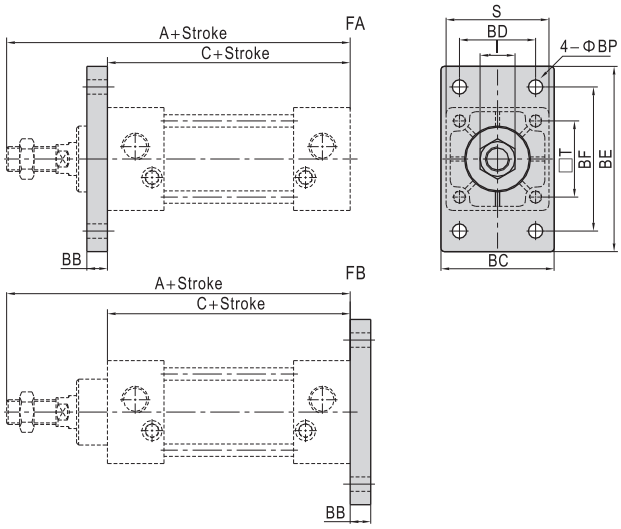

Φ125~Φ250

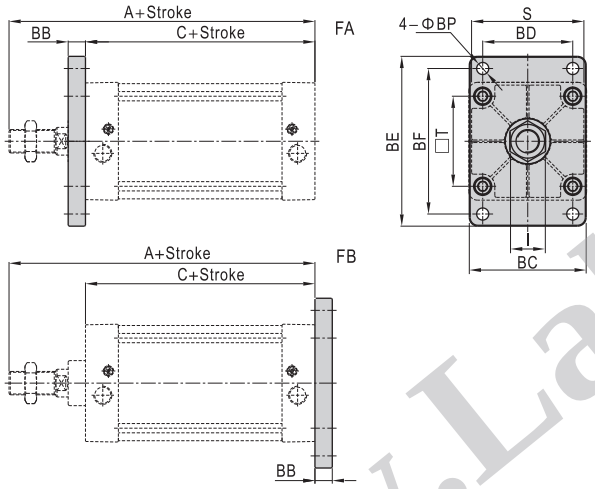

Bore size\Item	A	C	BB	BC	BD	BE	BF	BP	I	S	T
32	140	93	10	47	33	80	58	7	17	45	33
40	142	93	10	53	36	90	70	7	17	50	37
50	150	93	10	65	47	104	86	9	23	62	47
63	153	96	12	75	56	118	98	9	23	75	56
80	182	107	16	95	70	140	119	11	26	94	70
100	188	113	16	115	84	160	138	11	26	112	84
125	203	115	20	135	104	196	168	14	41	136	104
160	239	126	20	173	134	248	212	18	55	174	134
200	244	126	25	213	163	286	250	18	55	214	163
250	294	153	25	255	201	356	312	22	65	267	202

CB

Φ32~Φ100

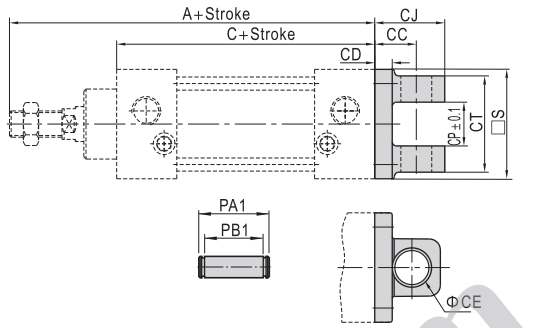

Φ125~Φ250

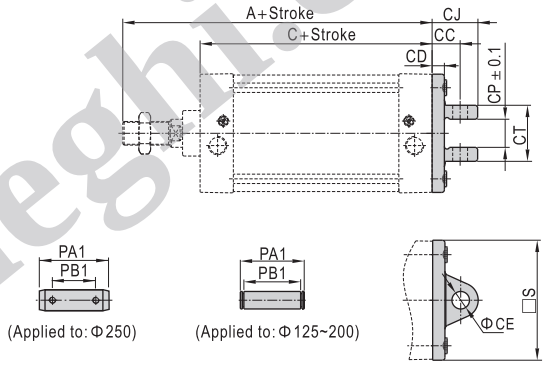

Bore size\Item	A	C	S	CC	CD	CE	CJ	CP	CT	PA1	PB1
32	140	93	45	19	9	12	29.5	16.3	32	39	32.8
40	142	93	49	19	9	14	30.5	20.3	44	51	44.8
50	150	93	61	19	10	14	31	20.3	52	59	52.8
63	153	96	74	19	10	14	31.5	20.3	52	59	52.8
80	182	107	93	32	14	20	48.5	32.3	64	73	64.8
100	188	113	111	32	14	20	49	32.3	64	73	64.8
125	203	115	135	32	14	20	52	32.1	64	73	64.8
160	239	126	173	40	15	28	68	40.1	80	90.2	80.8
200	244	126	213	60	23	28	90	40.1	80	90.2	80.8
250	294	153	255	70	24	36	106	50.1	100	130	108

www.Laheghi.com

Accessories

TC

Φ32～Φ100

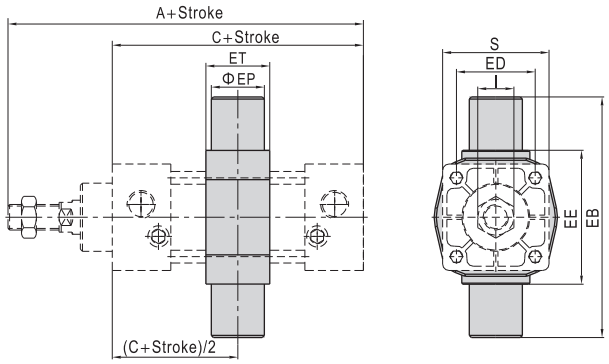

Φ125～Φ250

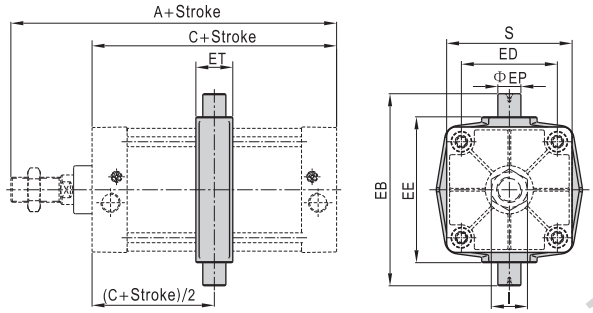

Bore size\Item	A	C	EB	ED	EE	EP	ET	I	S
32	140	93	87	33	55	16	22	17	45
40	142	93	113	37	63	25	28	17	50
50	150	93	126	47	76	25	28	23	62
63	153	96	138	56	88	25	30	23	75
80	182	107	164	70	114	25	32	26	94
100	188	113	182	84	132	25	38	26	112
125	203	115	208	104	158	25	40	41	136
160	239	126	272	134	200	36	46	55	174
200	244	126	318	163	246	36	46	55	214
250	294	153	394	202	304	45	56	65	267

Note) The installation position of the accessories can not be adjusted arbitrarily.

TCM1

Φ32～Φ100

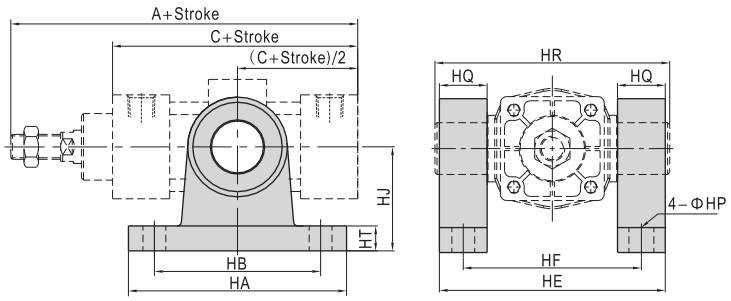

Φ125～Φ250

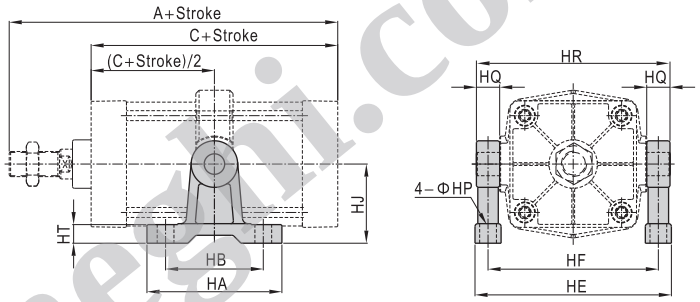

Bore size\Item	A	C	HA	HB	HE	HF	HP	HQ	HR	HT	HJ
32	140	93	100	75	90	71	12	16	87	11	54
40	142	93	103	80	109	86	11	23	113	12	50
50	150	93	103	80	122	99	11	23	126	12	50
63	153	96	103	80	134	111	11	23	138	12	50
80	182	107	110	85	160	137	13	23	164	12	70
100	188	113	110	85	178	155	13	23	182	12	70
125	203	115	145	105	211	183	18	25	208	20	85
160	239	126	185	140	272	236	22	36	272	25	130
200	244	126	185	140	318	282	22	36	318	25	130
250	294	153	215	165	394	349	26	45	394	28	160

Note) The installation position of the accessories can not be adjusted arbitrarily.

www.Lahegni.com

Accessories

List for ordering code of accessories

Accessories / Bore size	Mounting accessory		
	LB	FA FB	CA
32	F-SC32LB	F-SC32FA	F-SC32CA
40	F-SC40LB	F-SC40FA	F-SC40CA
50	F-SC50LB	F-SC50FA	F-SC50CA
63	F-SC63LB	F-SC63FA	F-SC63CA
80	F-SC80LB	F-SC80FA	F-SC80CA
100	F-SC100LB	F-SC100FA	F-SC100CA
125	F-SC125LB	F-SC125FA	F-SC125CA
160	F-SC160LB	F-SC160FA	F-SC160CA
200	F-SC200LB	F-SC200FA	F-SC200CA
250	F-SC250LB	F-SC250FA	F-SC250CA

SC

Accessories / Bore size	Mounting accessory		
	CB	TC	TCM1
32	F-SC32CB	F-SC32TC	F-SI40TCM1
40	F-SC40CB	F-SC40TC	F-SC40TCM1
50	F-SC50CB	F-SC50TC	F-SC40TCM1
63	F-SC63CB	F-SC63TC	F-SC40TCM1
80	F-SC80CB	F-SC80TC	F-SC80TCM1
100	F-SC100CB	F-SC100TC	F-SC80TCM1
125	F-SC125CB	F-SC125TC	F-SC125TCM1
160	F-SC160CB	F-SC160TC	F-SC160TCM1
200	F-SC200CB	F-SC200TC	F-SC160TCM1
250	F-SC250CB	F-SC250TC	F-SC250TCM1

Accessories / Bore size	Knuckle			
	I: I Knuckle	Y: Y Knuckle	F: F Knuckle	U: U Knuckle
32	F-M10X125I	F-M10X125Y	F-M10X125F	F-M10X125U
40	F-M12X125I	F-M12X125Y	F-M12X125F	F-M12X125U
50	F-M16X150I	F-M16X150Y	F-M16X150F	F-M16X150U
63	F-M16X150I	F-M16X150Y	F-M16X150F	F-M16X150U
80	F-M20X150I	F-M20X150Y	F-M20X150F	F-M20X150U
100	F-M20X150I	F-M20X150Y	F-M20X150F	F-M20X150U
125	F-M27X200I	F-M27X200Y	-	F-M27X200U
160	F-M36X200I	F-M36X200Y	-	F-M36X200U
200	F-M36X200I	F-M36X200Y	-	F-M36X200U
250	F-M42X200I	F-M42X200Y	-	-

Accessories / Bore size	Sensor switch							
	CS1–A	DS1–A	CS1–F	DS1–F	CS1–U	DS1–U	CS1–B	DS1–B
32~100	CS1–A	DS1–A	CS1–F	DS1–F	CS1–U	DS1–U	–	–
125~250	–	–	–	–	–	–	CS1–B	DS1–B

www.Laheghi.com